802 WD AIREX 1/2D-2/2G 14V

COMPRESSED AIR VACUUM CLEANER ATEX CERTIFIED FOR ZONE 20 INTERNAL AND ZONE 21 EXTERNAL

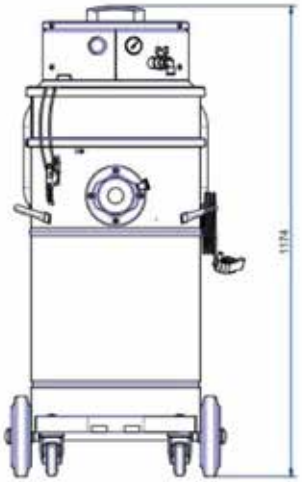

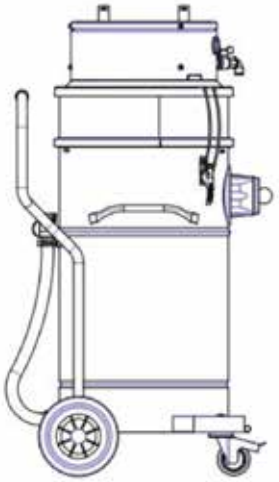

Filter category:

DRY TYPE DUST COLLECTOR
(EN 17348 DT)

WET TYPE DUST COLLECTOR
(EN 17348 WT)

FEATURES

Wet and dry

Compact and mobile

Stainless steel construction

Polyester, antistatic PTFE / polypropylene filter and floating device for liquids

Voltage, 7 or 14 Venturi, maintenance-free

COPYRIGHT 2026 DELFIN S.R.L. ALL RIGHTS RESERVED
COPYRIGHT 2026 DELFIN S.R.L. ALL RIGHTS RESERVED

DELFIN
FOR A DUST-FREE WORLD

www.delfinvacuums.com
delfin@delfinvacuums.it

All data mentioned in this document may change without notice. All data contained in this document is subject to change without notice.

TECHNICAL DATA

		802WDAIREX14VZ21-001
Use Zone		ATEX Zone 1 and 2 Gas, 21 and 22 Dust
Marking		II 1/2D Ex h IIIC T85°C Da/Db – II 2/2G Ex h IIB T6 Gb/Gb
Ex Category		1/2D (20 int/21 ext) 2/2G (1 int/1 ext)
Suction inlet diameter	mm	80
Tank capacity	L.	80
Noise level	dB(A)	68
Dimensions	cm	56x60x105h
Weight	kg	36
Voltage	nL/min (^{3}/h)	1458 (87)
Air Supply Pressure	bar	6
External air supply hose diameter	mm	12
Maximum vacuum	mmH2O	3700
Continuous waterlift	mmH2O	3700
Maximum air flow	m^3/h	300
Motor Type		Compressed Air / Venturi
Primary filter		Bag
Filter surface area - solid filter (dry)	cm2	5000
Diameter of the solid filter (dry)	mm	420
Filter media for primary solid filter (dry)		Polyester
Primary filter (wet)		Bag
Filter area - liquid filter (wet)	cm2	5000
Diameter of liquid filter (wet)	mm	420
Filter media for liquid filter (wet)		Polypropylene
Filtration	µm	300
Absolute HEPA Filter		Standard
Filter area of the absolute filter	cm2	20600

OPTIONAL

Code	Description
X	AISI 304 stainless steel container

MACHINE CODE	DESCRIPTION
802WDAIREX14VZ21-001	802 WD AIREX 1/2D - 2/2G IECEX Da/Db - Gb/Gb 14V XXX 80L H MT ANT

All data mentioned in this document may change without notice. All data contained in this document is subject to change without notice.

COPYRIGHT 2026 DELFIN S.R.L. ALL RIGHTS RESERVED
COPYRIGHT 2026 DELFIN S.R.L. ALL RIGHTS RESERVED

DELFIN
FOR A DUST-FREE WORLD

www.delfinvacuums.com
delfin@delfinvacuums.it