MTL 3533 EX1/2D

THREE-PHASE SUCTION SYSTEM ATEX CERTIFIED WITH SIDE CHANNEL BLOWER

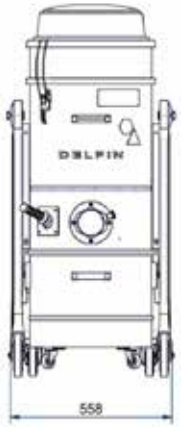

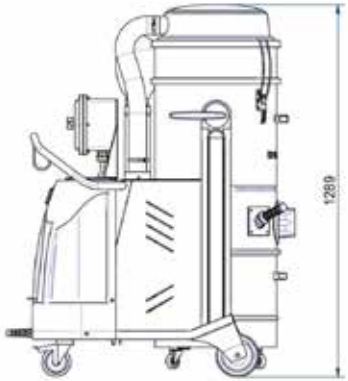

Filter category:

DRY TYPE DUST COLLECTOR
(EN 17348 DT)

FEATURES

Compact, stable and mobile

Stainless Steel Tank

Antistatic filter class M, absolute filter (H14) included

Ex-certified dust-tight side-channel blower and control panel, ATEX-certified accessories, and tested non-metallic parts

Compliance with EN IEC 62784:2018 for Zone 22

COPYRIGHT 2026 DELFIN S.R.L. ALL RIGHTS RESERVED
COPYRIGHT 2026 DELFIN S.R.L. ALL RIGHTS RESERVED

DELFIN
FOR A DUST-FREE WORLD

www.delfinvacuums.com
delfin@delfinvacuums.it

All data mentioned in this document may change without notice. All data contained in this document is subject to change without notice.

TECHNICAL DATA

		MTL3533EX1/2D-001
Use Zone		ATEX Zone: 20 Internal/21 External
Marking		II 1/2D Ex h tb IIIC T135°C (Int) / T195°C (ext) Da/Db
Ex Category		1/2D (20 int/21 ext)
Voltage	V	400
Power	kW	4
Frequency	Hz	50
Current draw	A	7.4
Suction inlet diameter	mm	80
Tank capacity	L.	45
Noise level	dB(A)	69
Dimensions	cm	58x110x130h
Weight	kg	85
Electrical protection	IP	65
Maximum vacuum	mmH2O	2600
Continuous waterlift	mmH2O	2600
Maximum air flow	m^3/h	320
Motor Type		Three-phase Turbine
Primary filter		Star
Primary solid filter (dry)		Star
Filter class (IEC 60335-2-69) for dry particulate filter		ANT M
Filter surface area - solid filter (dry)	cm2	20000
Diameter of the solid filter (dry)	mm	420
Filter media for primary solid filter (dry)		Polyester
Filter cleaning system		Manual
Absolute HEPA Filter		Standard
Filter area of the absolute filter	cm2	27100
Absolute filter class (EN 1822-5)		H14 with 99.995% efficiency according to the MPPS method

MACHINE CODE	DESCRIPTION
MTL3533EX1-2D-001	MTL3533 EX1/2D

OPTIONAL

Code	Description	
X	AISI 304 stainless steel container	INCLUDED
XX	Steel container and filter chamber in AISI 304 stainless steel	
IP	Internal mirror polishing of container and filter chamber	

COPYRIGHT 2026 DELFIN S.R.L. ALL RIGHTS RESERVED
COPYRIGHT 2026 DELFIN S.R.L. ALL RIGHTS RESERVED

All data mentioned in this document may change without notice. All data contained in this document is subject to change without notice.

DELFIN
FOR A DUST-FREE WORLD

www.delfinvacuums.com
delfin@delfinvacuums.it