PHARMA 20.18 Z22/3D

INDUSTRIAL VACUUM CLEANER FOR DUST EXTRACTION, ATEX ZONE 22 CERTIFIED

Filter category:

DRY TYPE DUST COLLECTOR
(EN 17348 DT)

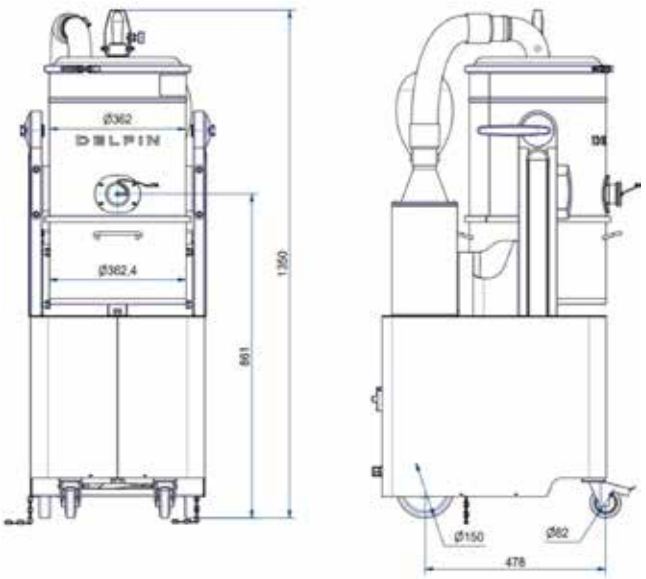

FEATURES

Compact, quiet and flexible industrial vacuum cleaner for on-board machine suction

Star filter with integrated ergonomic cleaning system and an H14 HEPA filter installed for the air exiting the vacuum

Ex-certified, dust-tight side-channel blower and control panel. Compliance with EN IEC 62784:2018 for Zone 22

AISI 304 stainless steel tank with butt-welded bottom, satin-finished exterior and polished interior, with carrying handle. Clamp ø50 quick coupling suction inlet in stainless steel

COPYRIGHT 2026 DELFIN S.R.L. ALL RIGHTS RESERVED
COPYRIGHT 2026 DELFIN S.R.L. ALL RIGHTS RESERVED

DELFIN
FOR A DUST-FREE WORLD

www.delfinvacuums.com
delfin@delfinvacuums.it

All data mentioned in this document may change without notice. All data contained in this document is subject to change without notice.

TECHNICAL DATA

		Z22DBFV30MAN-001
Use Zone		ATEX Zone: 20 Internal/22 External
Marking		II 1/3D Ex h tb IIIC T135°C (Int) /T195°C (ext) Da/Dc
Ex Category		1/3D (20 int/22 ext)
Voltage	V	400
Power	kW	2.5
Frequency	Hz	50
Current draw	A	5.0
Suction inlet diameter	mm	50
Tank capacity	L.	25
Noise level	dB(A)	70
Dimensions	cm	54x55x105h
Weight	kg	60
Electrical protection	IP	65
Maximum vacuum	mmH2O	2600
Continuous waterlift	mmH2O	2000
Maximum air flow	m^3/h	318
Motor Type		Three-phase Turbine
Primary filter		Star
Primary filter surface area	cm2	8000
Primary filter diameter	mm	360
Primary filter media		Polyester
Filter class (IEC 60335-2-69) primary filter		ANT M
Filter cleaning system		Manual
Absolute HEPA Filter		Included
Absolute filter class (EN 1822-5)		H14 with 99.995% efficiency according to the MPPS method
Pressure relief valve		Included

MACHINE CODE	DESCRIPTION
Z22PHARMA20.18-001	PHARMA 20.18 3D IECEX 22L DT DS H X

OPTIONAL

Code	Description	
H	Additional H14 absolute filter	INCLUDED
X	AISI 304 stainless steel container	
XX	Steel container and filter chamber in AISI 304 stainless steel	
XXX	Chamber chassis, container and trolley in AISI 304 stainless steel	
MT	Earth Grounding	INCLUDED
SB	Safe bagging system (1 bag)	

COPYRIGHT 2026 DELFIN S.R.L. ALL RIGHTS RESERVED
COPYRIGHT 2026 DELFIN S.R.L. ALL RIGHTS RESERVED

All data mentioned in this document may change without notice. All data contained in this document is subject to change without notice.

DELFIN
FOR A DUST-FREE WORLD

www.delfinvacuums.com
delfin@delfinvacuums.it